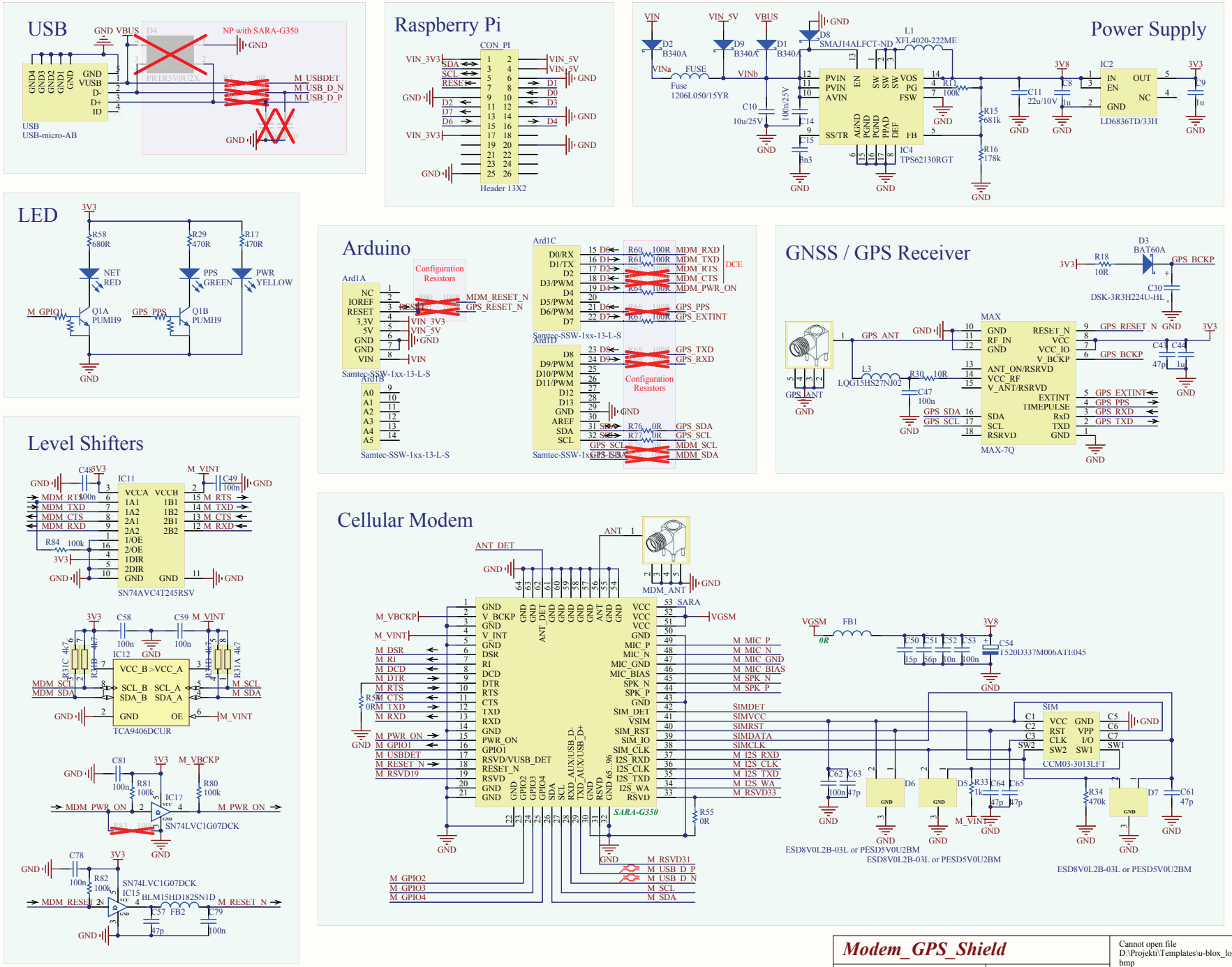
USB
NP with SARA-G350
USB
USB-micro-AB
Raspberry Pi
Header 13X2
Power Supply
LD6836TD/33H
TPS62130RGT
LED
Arduino
Configuration Resistors
GNSS / GPS Receiver
MAX-7Q
Cellular Modem
SARA-G350
Level Shifters
SN74AVC4T245RSV
TCA9406DCUR
SN74LVC1G07DCK
Modem_GPS_Shield
ublox.SchDoc
Revision: 1.2
Size: A3
Sheet 4 of 5
Date: 22.08.2014
Web: www.u-blox.com
Cannot open file D:\Projekti\Templates\u-blox_logo_mini.bmp