UL = UnLoaded = normally not mounted component.

Default jumper settings are indicated in the schematic.
However, always check jumper positions on actual boards
since there is no guarantee that all jumpers are in default place.

Rev A
Minor layout adjustments

Rev PA1
First prototype

TITLE: LPC4088 Experiment Base Board rev A

Document Number:

Date: 2014-09-03 20:19:42 | Sheet: 1/9

LPC4088 Pin Usage on Base Board

LPC4088 pin	LPC4088 mbed	UART I/F	Joystick	RGB-LED AIN Button	Character LCD I/F	uSD I/F	Audio Codec I2S I/F	Serial Exp.	Arduino Exp.
P1.24	P5: SSP0_MOSI				SPI_MOSI	SPI_MOSI			
P1.23	P6: SSP0_MISO					SPI_MISO			
P1.20	P7: SSP0_SCK				SPI_SCK	SPI_SCK			
P0.21	P8: U4_OE / U4_CLK					SPI_SSEL			D2
P0.0	P9: CAN_RD_1 / U3_TXD / I2C1_SDA / U0_TXD	UART_TXD						UART_TXD	D1
P0.1	P10: CAN_TD_1 / U3_RXD / I2C1_SCL / U0_RXD	UART_RXD						UART_RXD	D0
P0.9	P11: I2S_TX_SDA / SSP1_MOSI						I2S_TX_SDA	SPI_MOSI	D11
P0.8	P12: I2S_TX_WS / SSP1_MISO						I2S_TX_WS	SPI_MISO	D12
P0.7	P13: I2S_TX_SCK / SSP1_SCK						I2S_TX_SCK	SSP_SCK	D13
P0.6	P14: I2S_RX_SDA / SSP1_SSEL						I2S_RX_SDA	SSP_SSEL	D10
P0.23	P15: ADC0_IN[0] / I2S_RX_SCK			TRIM. POT.					A0
P0.24	P16: ADC0_IN[1] / I2S_RX_WS				LCD-RST				A1
P0.25	P17: ADC0_IN[2] / I2S_RX_SDA / U3_TXD				LCD-A0			AIN/GPIO	A2
P0.26	P18: ADC0_IN[3] / DAC_OUT / U3_RXD							AIN/AOUT/GPIO	A3
P1.30	P19: USB_PWRD2 / USB_VBUS / ADC0_IN[4] / I2C0_SDA (Note: used by USB2 Device interface)							I2C_SDA	A4 SDA
P1.31	P20: USB_OVRCR2n / ADC0_IN[5] / I2C0_SCL							I2C_SCL	A5 SCL
P0.2	P42: HDK_MBED_TX (U0_TXD / U3_TXD)								
P0.3	P41: HDK_MBED_RX (U0_RXD / U3_RXD)								
P5.0	P39: SSP2_MOSI		JOY_LEFT						D5
P5.1	P38: SSP2_MISO		JOY_DOWN					GPIO	D6
P5.4	P37: U0_OE / U4_TXD		JOY_RIGHT					GPIO	D9
USB2-DM	P36: EXT-USB2-DM								
USB2-DP	P35: EXT-USB2-DP								
P0.4	P34: I2S_RX_SCK / CAN_RD_2						I2S_RX_SCK		D7
P0.5	P33: I2S_RX_WS / CAN_TD_2						I2S_RX_WS		D4
P5.2	P32: SSP2_SCK / I2C0_SDA		JOY_UP						D3
P5.3	P31: SSP2_SSEL / U4_RXD / I2C0_SCL		JOY_CENTER						D8
P1.2	P30: SD_CLK / PWM0_1				SPI_SSEL	SDCLK			
P1.3	P29: SD_CMD / PWM0_2					SDCMD			
P1.5	P28: SD_PWR / PWM0_3			PWM3-GREEN					
P1.6	P27: SD_DAT_0 / PWM0_4					SDDAT0			
P1.7	P26: SD_DAT_1 / PWM0_5			PWM5-BLUE		SDDAT1			
P1.11	P25: SD_DAT_2 / PWM0_6			PWM6-RED		SDDAT2			
P1.12	P24: SD_DAT_3					SDDAT3			
P2.10	P23: ISP_EN / EINT_0 / NMI			Push-button on LPC4088 QSB					
P2.1	Via FPC				BL_CTRL				
P4.29	Via FPC U3_RXD	U3_RXD							
P4.28	Via FPC U3_TXD	U3_TXD							
P2.27	Via FPC						P2.27-ALT_12MHZ		

LPC4088 pin	Graphical LCD I/F
Via FPC	
	TFT 5:6:5 mode
P2.6-LCD_VD4	RED1
P0.10-LCD_VD5	RED2
P2.8-LCD_VD6	RED3
P2.9-LCD_VD7	RED4
P0.11-LCD_VD10	GREEN0
P1.21-LCD_VD11	GREEN1
P1.22-LCD_VD12	GREEN2
P0.19-LCD_VD13	GREEN3
P0.20-LCD_VD14	GREEN4
P1.25-LCD_VD15	GREEN5
P2.12-LCD_VD18	RED0
P2.13-LCD_VD19	BLUE0
P1.26-LCD_VD20	BLUE1
P1.27-LCD_VD21	BLUE2
P1.28-LCD_VD22	BLUE3
P1.29-LCD_VD23	BLUE4
P2.11	LCD_DISP
P2.2-LCD_DCLK	LCD_DCLK
P2.4-LCD_ENA	LCD_ENAB
P2.0-LCD_PWR	LCD_PWR
P2.3-LCD_FP	LCD_FP
P2.5-LCD_LP	LCD_LP
P2.21	LCD_BL_PWR
P2.1	LCD_BL_CTRL
P2.22	TP_XL
P2.23	TP_YU
P2.25	TP_IRQ

I2C0 (P0.27/28 or P1.30/31) Devices on Base Board:

LM75 Temp sensor, 8-bit I2C address (0x92/0x93): 1.0.0.1.0.0.1.RW
MMA7455 Accelerometer, 8-bit I2C address (0x3A/3B): 0.0.1.1.1.0.1.RW
WM8731 Audio Codec, 8-bit I2C address (0x34/0x35): 0.0.1.1.0.1.0.RW
AR1021 Touch screen I/F, 8-bit I2C address (0x9A/0x9B): 1.0.0.1.1.0.1.RW

I2C0 (P0.27/28) Devices on LPC4088 QuickStart Board:

24AA02E48T MAC address, 8-bit I2C address (0xA0/0xA1): 1.0.1.0.0.0.0.RW

TITLE: LPC4088 Experiment Base Board rev A

Document Number:

Date: 2014-09-03 20:19:42

Expansion connectors

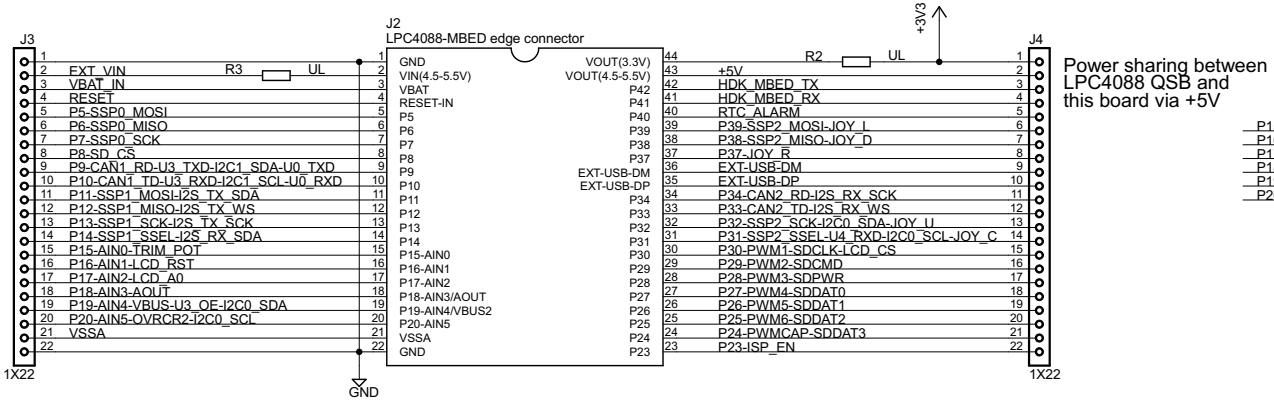

Power sharing between LPC4088 QSB and this board via +5V

LPC4088 pin	LPC4088 mbed
	GND
	VIN (4.5-5.5V)
VBAT	VBAT
Reset-in	RESET
P1.24	P5: SSP0_MOSI
P1.23	P6: SSP0_MISO
P1.20	P7: SSP0_SCK
P0.21	P8: U4_OE / U4_CLK
P0.0	P9: CAN_RD_1 / U3_TXD / I2C1_SDA / U0_TXD
P0.1	P10: CAN_TD_1 / U3_RXD / I2C1_SCL / U0_RXD
P0.9	P11: I2S_TX_SDA / SSP1_MOSI / T2_MAT_3 / RTC_EV2 / CMP1_IN2
P0.8	P12: I2S_TX_WS / SSP1_MISO / T2_MAT_2 / RTC_EV1 / CMP1_IN3
P0.7	P13: I2S_TX_SCK / SSP1_SCK / T2_MAT_1 / RTC_EV0 / CMP_VREF
P0.6	P14: I2S_RX_SDA / SSP1_SSEL / T2_MAT_0 / U1_RTS / CMP_ROSC
P0.23	P15: ADC0_IN[0] / I2S_RX_SCK / T3_CAP_0
P0.24	P16: ADC0_IN[1] / I2S_RX_WS / T3_CAP_1
P0.25	P17: ADC0_IN[2] / I2S_RX_SDA / U3_TXD
P0.26	P18: ADC0_IN[3] / DAC_OUT / U3_RXD
P1.30	P19: USB_PWRD2 / USB_VBUS / ADC0_IN[4] / I2C0_SDA / U3_OE (Note: used by USB2 Device interface)
P1.31	P20: USB_OVRCR2n / ADC0_IN[5] / I2C0_SCL
	VSSA
	GND

LPC4088 pin	LPC4088 mbed
VOUT 3.3V	VOUT 3.3V
VOUT 5V	VOUT 5V Note: not current limited!
P0.2	U0_TXD / U3_TXD
P0.3	U0_RXD / U3_RXD
RTC-ALARM	RTC ALARM
P5.0	P39: SSP2_MOSI / T2_MAT_2
P5.1	P38: SSP2_MISO / T2_MAT_3
P5.4	P37: U0_OE / T3_MAT_3 / U4_TXD
USB2-DM	P36: EXT-USB2-DM
USB2-DP	P35: EXT-USB2-DP
P0.4	P34: I2S_RX_SCK / CAN_RD_2 / T2_CAP_0 / CMP_ROSC
P0.5	P33: I2S_RX_WS / CAN_TD_2 / T2_CAP_1 / CMP_RESET
P5.2	P32: SSP2_SCK / T3_MAT_2 / I2C0_SDA
P5.3	P31: SSP2_SSEL / U4_RXD / I2C0_SCL
P1.2	P30: SD_CLK / PWM0_1
P1.3	P29: SD_CMD / PWM0_2
P1.5	P28: SD_PWR / PWM0_3 / CMP1_IN1
P1.6	P27: SD_DAT_0 / PWM0_4 / CMP0_IN3
P1.7	P26: SD_DAT_1 / PWM0_5 / CMP1_IN0
P1.11	P25: SD_DAT_2 / PWM0_6
P1.12	P24: SD_DAT_3 / PWM0_CAP_0 / CMP1_OUT
P2.10	P23: ISP_EN / EINT_0 / NMI

Arduino™ UNO R3 Compatible Pinning

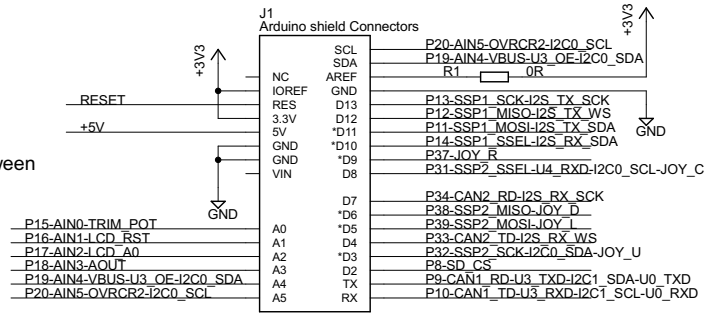

Arduino pin functionalities	
	D13: GPIO/SPI-SCK
	D12: GPIO/SPI-MISO
	D11: GPIO/PWM/SPI-MOSI
	D10: GPIO/PWM/SPI-SSEL
	D9: GPIO/PWM
	D8: GPIO
	D7: GPIO
	D6: GPIO/PWM
A0: GPIO/AIN	D5: GPIO/PWM
A1: GPIO/AIN	D4: GPIO
A2: GPIO/AIN	D3: GPIO/PWM
A3: GPIO/AIN	D2: GPIO
A4: GPIO/AIN/I2C-SDA	D1: GPIO/UART-TXD
A5: GPIO/AIN/I2C-SCL	D0: GPIO/UART-RXD

Serial Expansion Connector (SPI, UART, I2C)

1: GND	2: VCC (3.3V, max 250mA)
3: SPI-SCK	4: SPI-MOSI
5: SPI-MISO	6: SPI-SSEL
7: UART-RX/GPIO	8: UART-TX/GPIO
9: I2C-SCL	10: I2C-SDA
11: GPIO	12: GPIO
13: AIN0/GPIO	14: AIN3/AOUT/GPIO

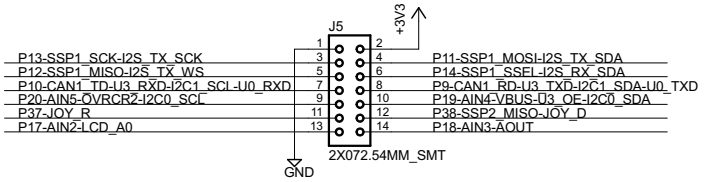

TITLE: LPC4088 Experiment Base Board rev A

Document Number:

Date: 2014-09-03 20:19:42

uSD Interface and UART interface

UART header for FTDI cable
UART3 via P4.28/P4.29

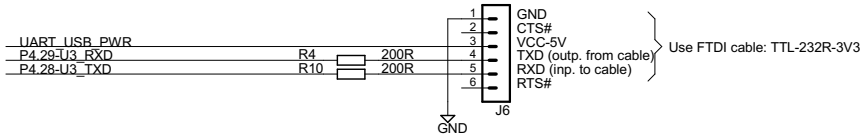

UART header for FTDI cable
UART0 or UART3 via P0.0/P0.1

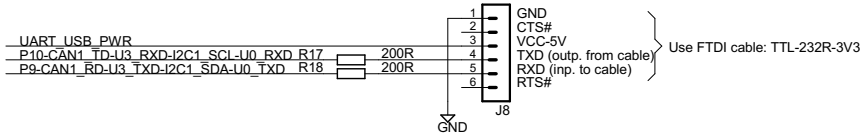

Pos 1-2: MCI interface
Pos 2-3: SPI interface

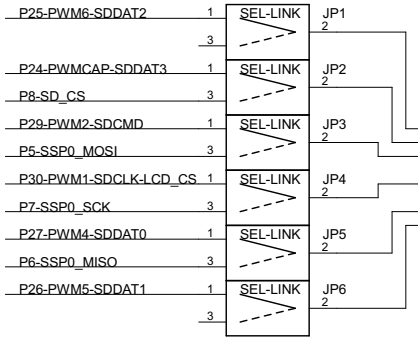

uSD Memory Card Interface

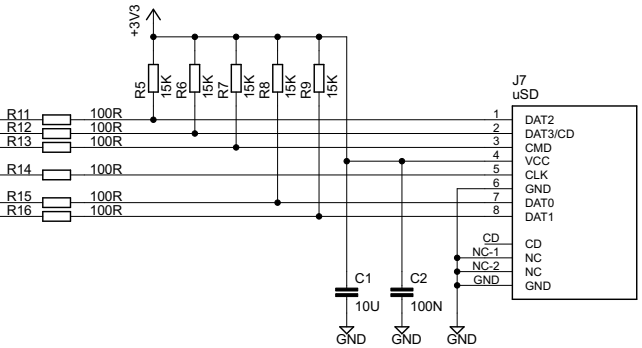

Not mounted

CAN interface

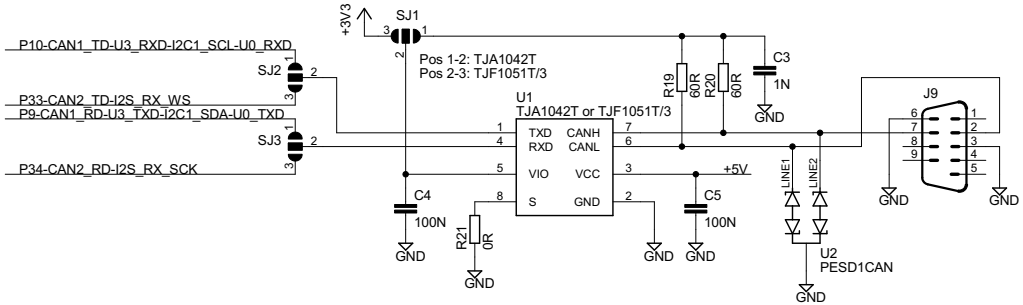

TITLE: LPC4088 Experiment Base Board rev A

Document Number:

Date: 2014-09-03 20:19:42

Character LCD, LEDs, RGB-LED and Joystick

SPI-interface to generic 3.3V powered character LCD + controlling 8 LEDs via SPI (shiftregister)

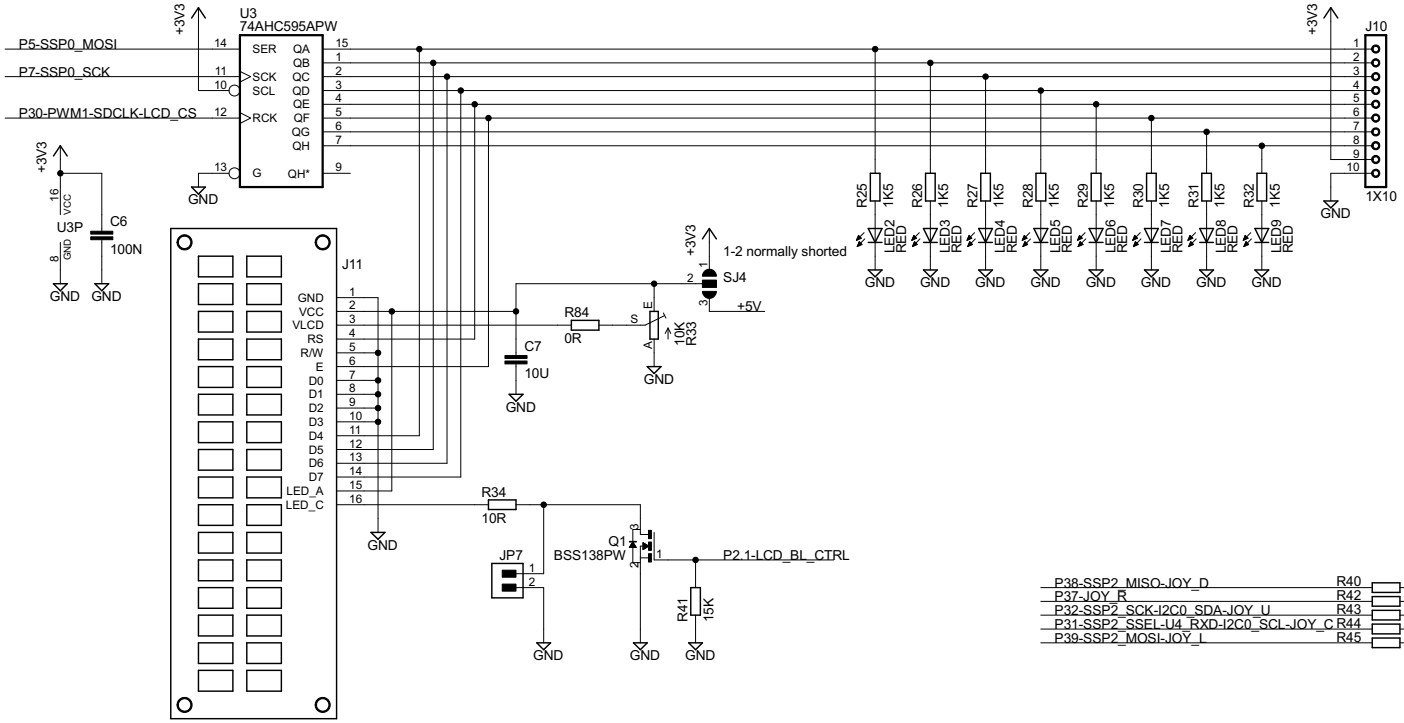

RGB-LED

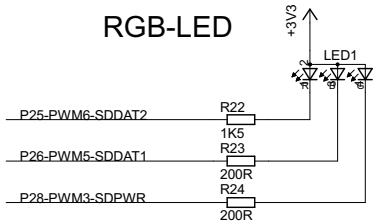

5-key Joystick Switch

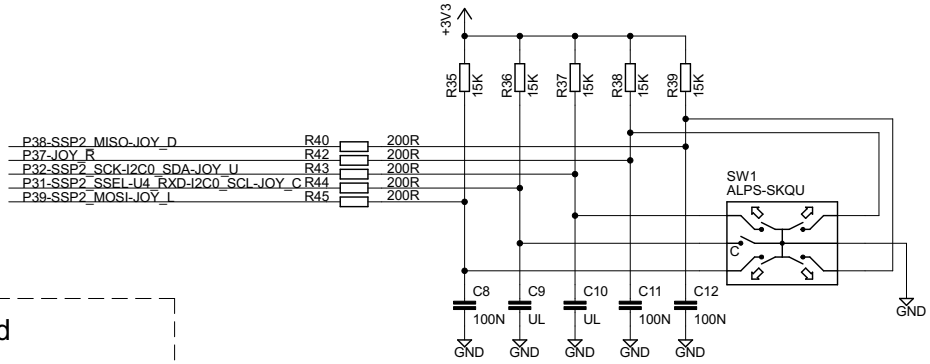

Note: C9/C10 not mounted since P5.2/P5.3 are open-drain outputs with 1500 ohm pull-ups.
Capacitive loading in the nets will severaly limit highest frequency the net can carry.

1.77" TFT LCD (128x160 pixels)
DM-TFT18-101
from www.DisplayModule.com

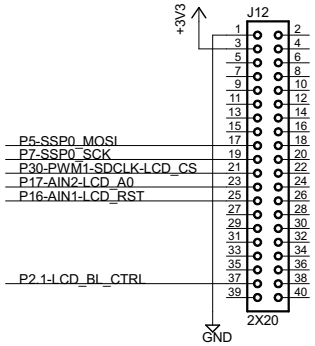

Not mounted

Reset generator

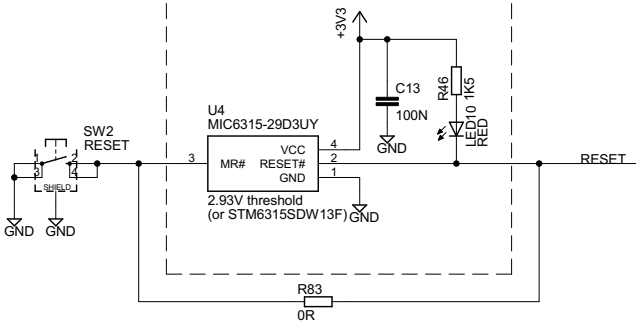

Embedded Artists

TITLE: LPC4088 Experiment Base Board rev A

Document Number:

Date: 2014-09-03 20:19:42

Sensors

I2C0 pin selection

Pos 1-2: P0.27/P0.28

Pos 2-3: P1.30/P1.31

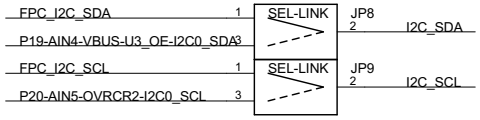

LM75 I2C Temperature Sensor

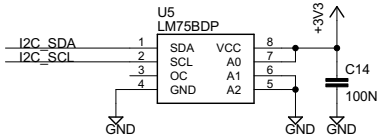

8-bit I2C address (0x92/0x93): 1.0.0.1.0.0.1.RW
7-bit I2C address (0x49): 1.0.0.1.0.0.1

3-axis Accelerometer

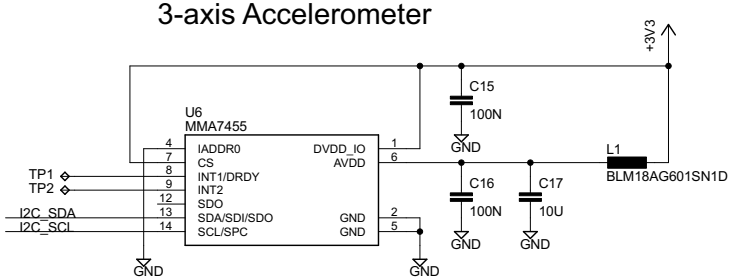

8-bit I2C address (0x3A/3B): 0.0.1.1.1.0.1.RW
7-bit I2C address (0x1D): 0.0.1.1.1.0.1

Analog Input

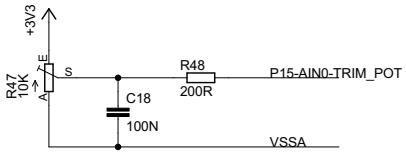

TITLE: LPC4088 Experiment Base Board rev A

Document Number:

Date: 2014-09-03 20:19:42

WM8731 Codec

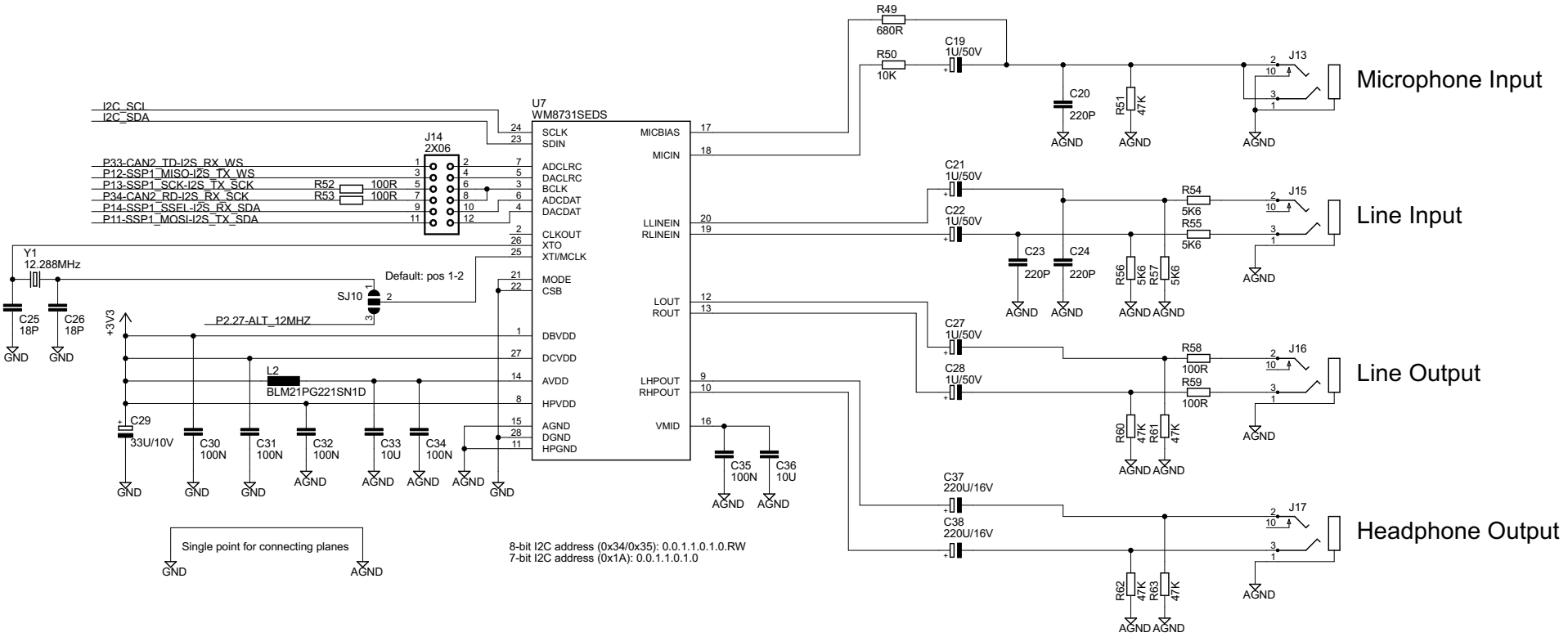

(C) Embedded Artists AB

TITLE: LPC4088 Experiment Base Board rev A

Document Number:

Date: 2014-09-03 20:19:42

Sheet: 7/9

Power supplies

Mounting Holes

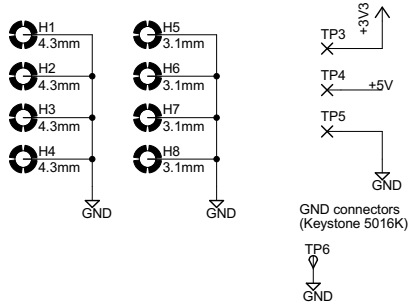

Power supply: 5V input, 3.3V/700mA output

External +5V Supply

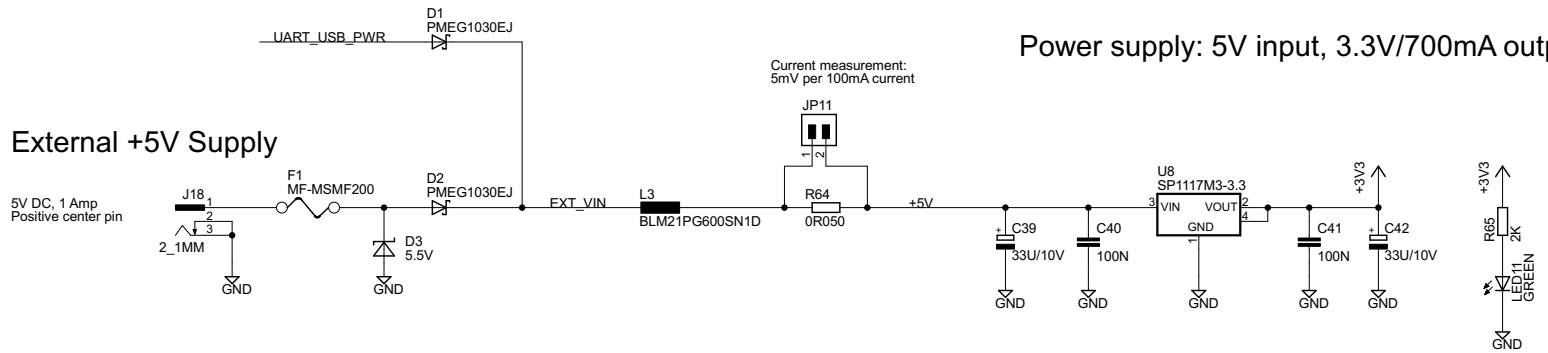

VBAT and Alarm Handling

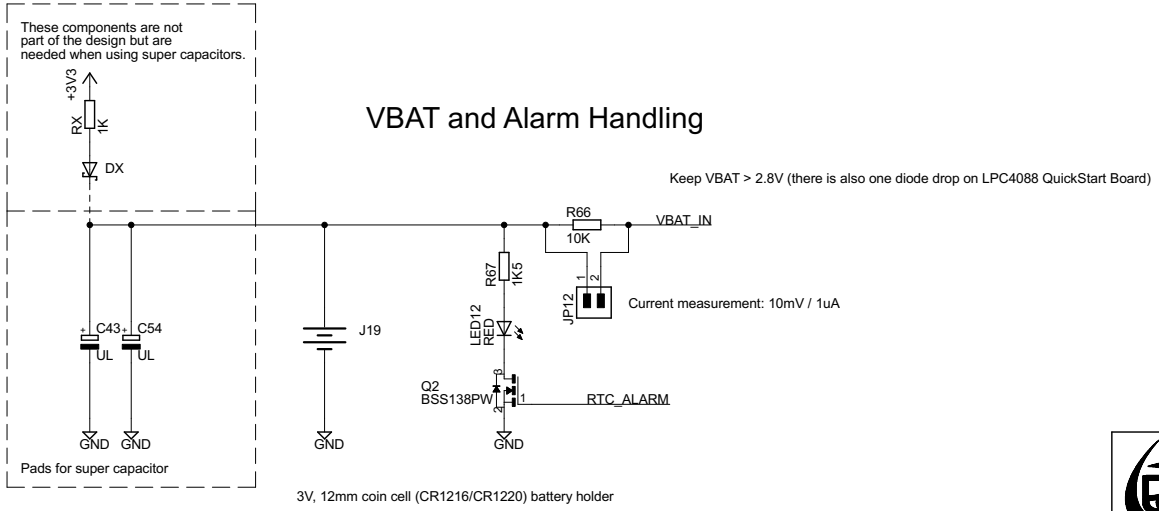

Embedded Artists

TITLE: LPC4088 Experiment Base Board rev A

Document Number:

Date: 2014-09-03 20:19:42

4.3"480x272 pixel LCD
5.0"800x480 pixel LCD

Display Interface from LPC4088 QuickStart Board

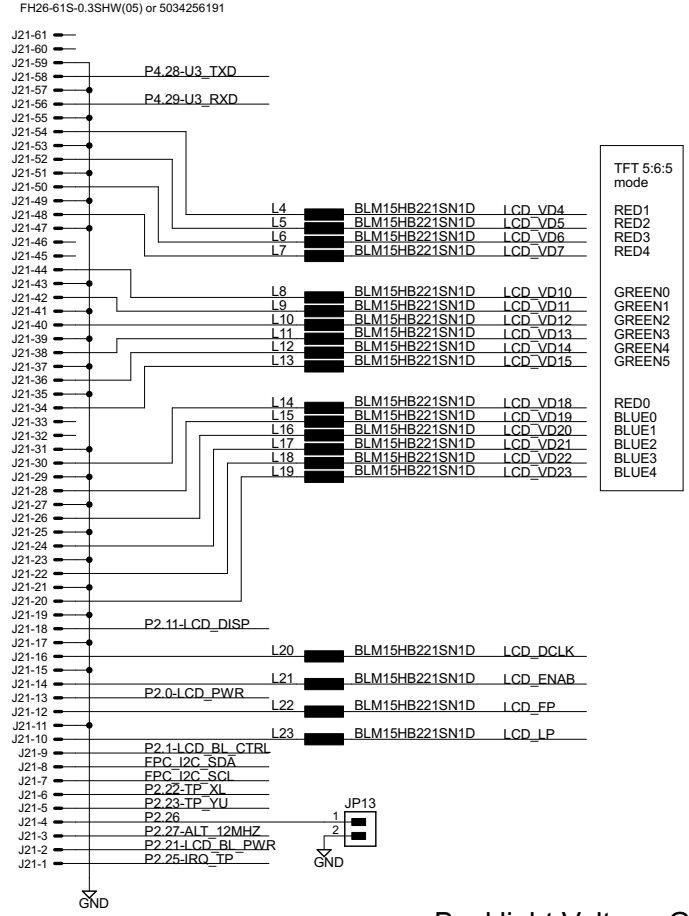

FPC connector, 0.5mm pitch, top contacts

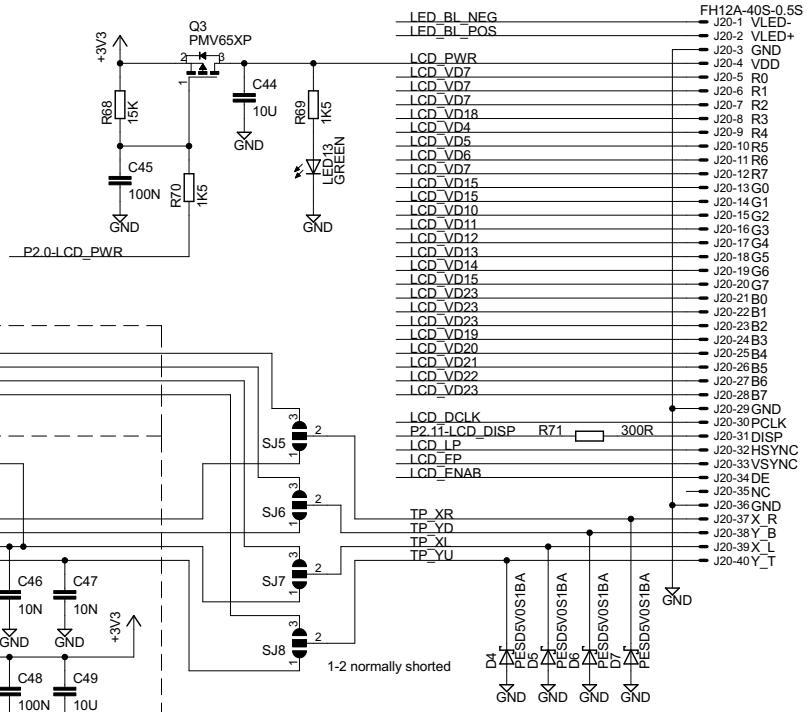

Touch Screen Controller

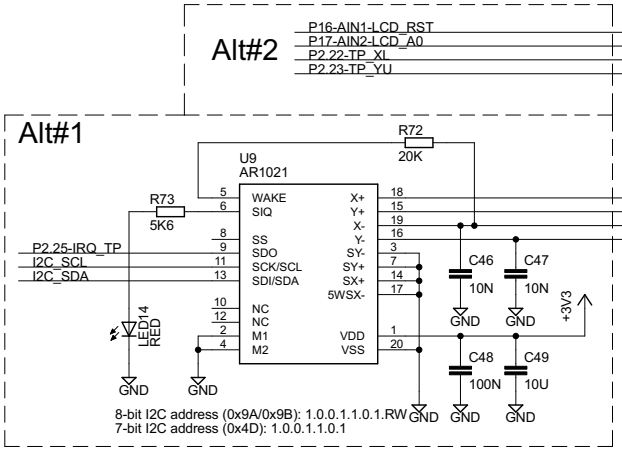

Backlight Voltage Generator

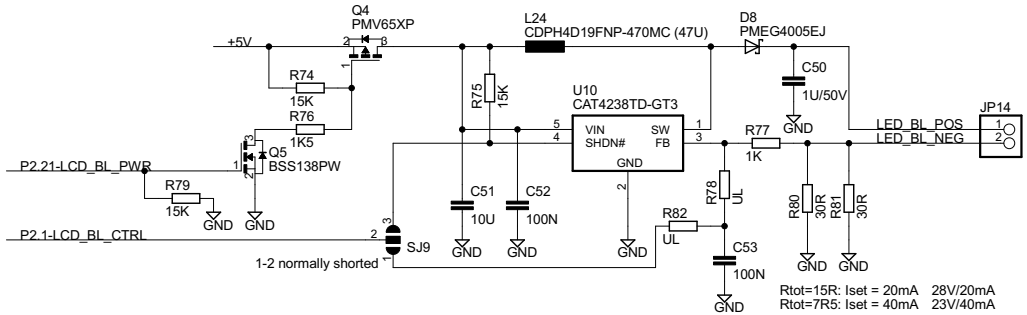

Embedded Artists

(C) Embedded Artists AB

TITLE: LPC4088 Experiment Base Board rev A

Document Number:

Date: 2014-09-03 20:19:42

Sheet: 9/9