Page 2: Connector for COM Carrier Board
Page 3: I2C-GPIO, I2C-EDID and Resistive Touch Controller
Page 4: Backlight current regulator
Page 5: Interface type A
Page 6: Interface type B
Page 7: Interface type C
Page 8: Interface type D
Page 9: Adapter to COM Carrier board rev A

UL = UnLoaded = normally not mounted component.

Default jumper settings are indicated in the schematic.
However, always check jumper positions on actual boards
since there is no guarantee that all jumpers are in default place.

Rev A
Added pads for optional +12V to +5V regulator (U9, J21)
Corrected polarity on J17.

Rev PA3
First release

(C) Embedded Artists AB

TITLE: COM Display Adapter rev A

Document Number:

Date: not saved!

Interface to COM Carrier Board

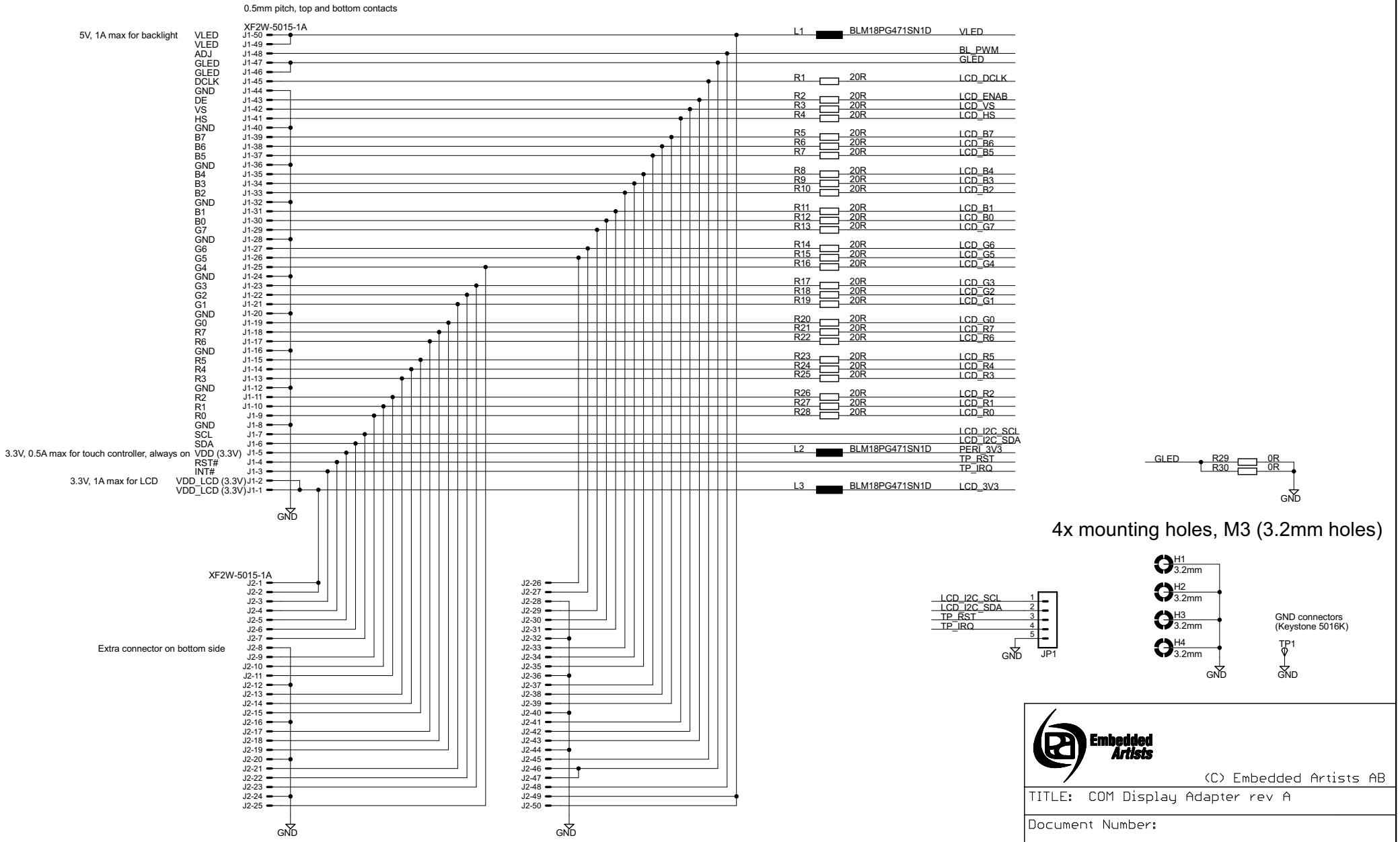

I2C-GPIO, I2C-EDID and Resistive Touch Controller

Control and Backlight Dimming

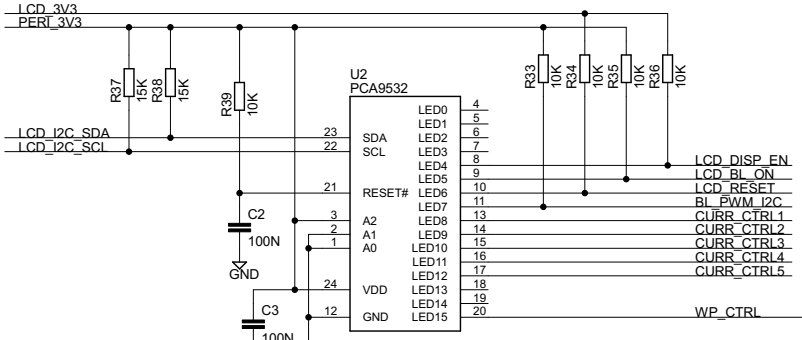

8-bit I2C address (0xC8/0xC9): 1.1.0.0.1.0.0.RW
7-bit I2C address (0x64): 1.1.0.0.1.0.0

64kbit EDID E2PROM

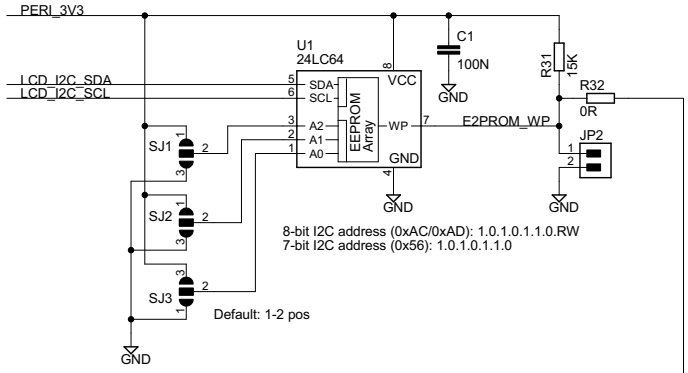

8-bit I2C address (0xAC/0xAD): 1.0.1.0.1.1.0.RW
7-bit I2C address (0x56): 1.0.1.0.1.1.0

Touch Screen Controller

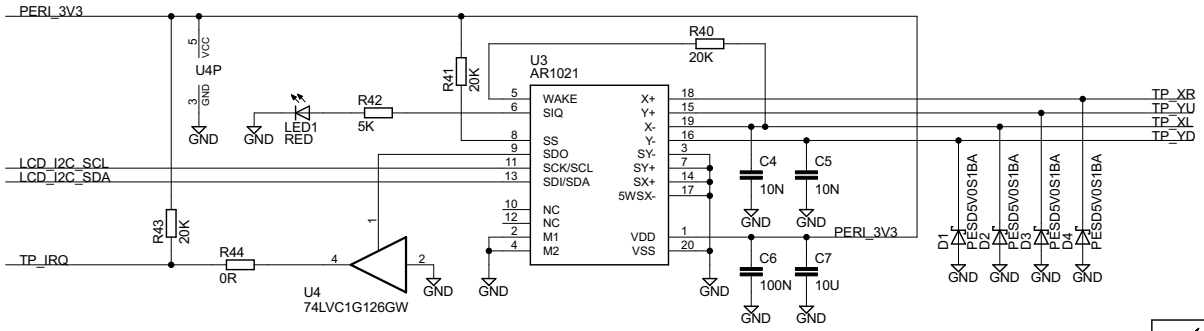

8-bit I2C address (0x9A/0x9B): 1.0.0.1.1.0.1.RW
7-bit I2C address (0x4D): 1.0.0.1.1.0.1

I2C Addresses

Touch Screen Controller: AR1021
8-bit I2C address (0x9A/0x9B): 1.0.0.1.1.0.1.RW
7-bit I2C address (0x4D): 1.0.0.1.1.0.1

64kbit EDID E2PROM
8-bit I2C address (0xAC/0xAD): 1.0.1.0.1.1.0.RW
7-bit I2C address (0x56): 1.0.1.0.1.1.0

GPIO Expander
8-bit I2C address (0xC8/0xC9): 1.1.0.0.1.0.0.RW
7-bit I2C address (0x64): 1.1.0.0.1.0.0

Embedded Artists

(C) Embedded Artists AB

TITLE: COM Display Adapter rev A

Document Number:

Date: not saved!

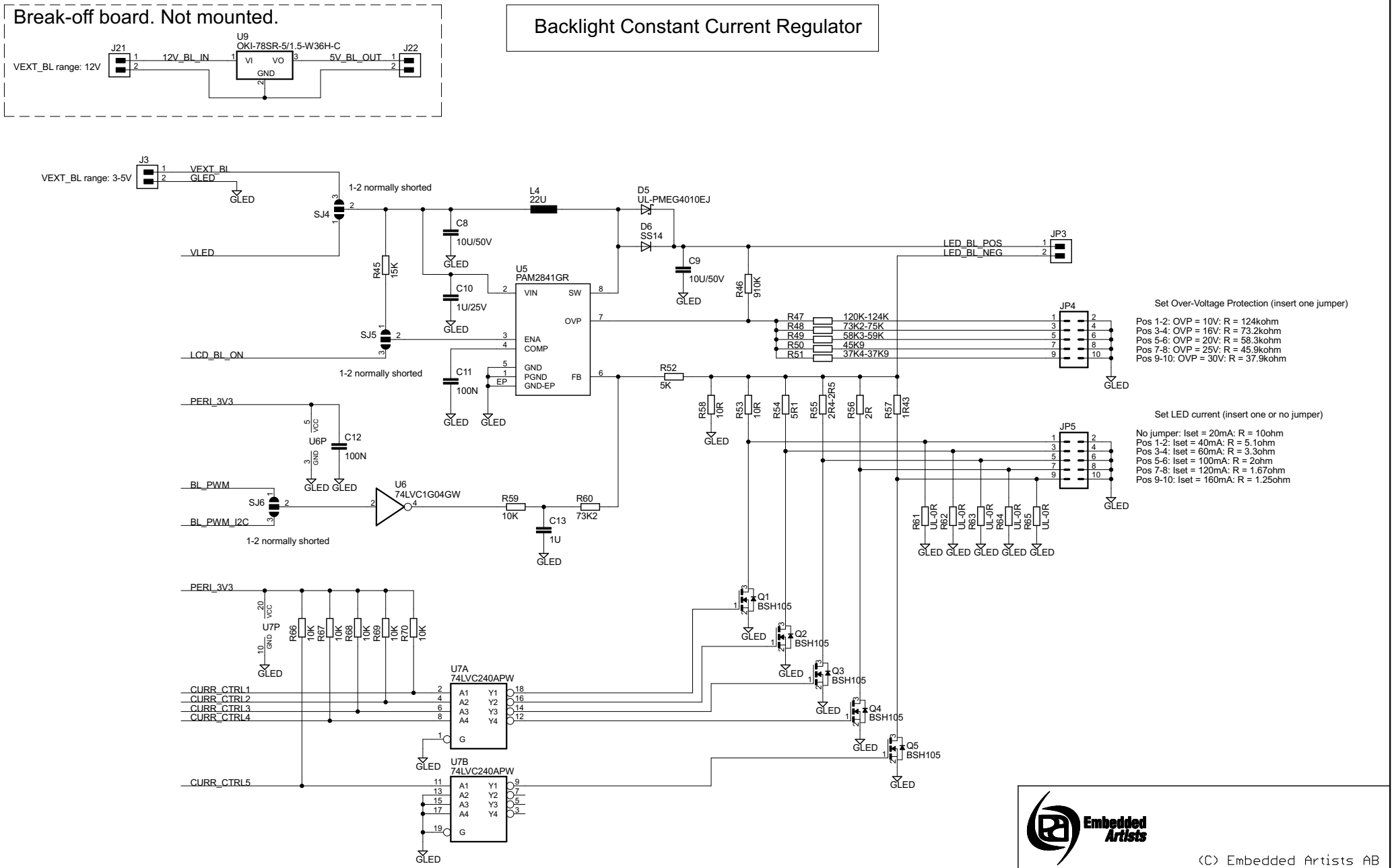
Break-off board. Not mounted.
VEXT_BL range: 12V
J21
12V_BL_IN
U9
OKI-78SR-5/1.5-W36H-C
VI
VO
GND
5V_BL_OUT
J22
Backlight Constant Current Regulator
J3
VEXT_BL range: 3-5V
VEXT_BL
GLED
1-2 normally shorted
SJ4
VLED
R45
15K
C8
10U/50V
C10
1U/25V
SJ5
LCD_BL_ON
1-2 normally shorted
C11
100N
L4
22U
D5
UL-PMEG4010EJ
D6
SS14
C9
10U/50V
R46
910K
U5
PAM2841GR
VIN
SW
OVP
ENA
COMP
GND
PGND
GND-EP
EP
FB
LED_BL_POS
LED_BL_NEG
JP3
JP4
R47
120K-124K
R48
73K2-75K
R49
58K3-59K
R50
45K9
R51
37K4-37K9
Set Over-Voltage Protection (insert one jumper)
Pos 1-2: OVP = 10V: R = 124kohm
Pos 3-4: OVP = 16V: R = 73.2kohm
Pos 5-6: OVP = 20V: R = 58.3kohm
Pos 7-8: OVP = 25V: R = 45.9kohm
Pos 9-10: OVP = 30V: R = 37.9kohm
R52
5K
R58
10R
R53
10R
R54
5R1
R55
2R4-2R5
R56
2R
R57
1R43
JP5
Set LED current (insert one or no jumper)
No jumper: Iset = 20mA: R = 10ohm
Pos 1-2: Iset = 40mA: R = 5.1ohm
Pos 3-4: Iset = 60mA: R = 3.3ohm
Pos 5-6: Iset = 100mA: R = 2ohm
Pos 7-8: Iset = 120mA: R = 1.67ohm
Pos 9-10: Iset = 160mA: R = 1.25ohm
R61
UL-0R
R62
UL-0R
R63
UL-0R
R64
UL-0R
R65
UL-0R
PERI_3V3
U6P
C12
100N
BL_PWM
SJ6
BL_PWM_I2C
1-2 normally shorted
U6
74LVC1G04GW
R59
10K
R60
73K2
C13
1U
U7P
R66
10K
R67
10K
R68
10K
R69
10K
R70
10K
CURR_CTRL1
CURR_CTRL2
CURR_CTRL3
CURR_CTRL4
CURR_CTRL5
U7A
74LVC240APW
U7B
74LVC240APW
A1
A2
A3
A4
Y1
Y2
Y3
Y4
G
Q1
BSH105
Q2
BSH105
Q3
BSH105
Q4
BSH105
Q5
BSH105
Embedded Artists
(C) Embedded Artists AB
TITLE: COM Display Adapter rev A
Document Number:
Date: not saved!
Sheet: 4/9

Interface type A

7" LCD, 800x480px: AT070TN83 (from Innolux) with RTP

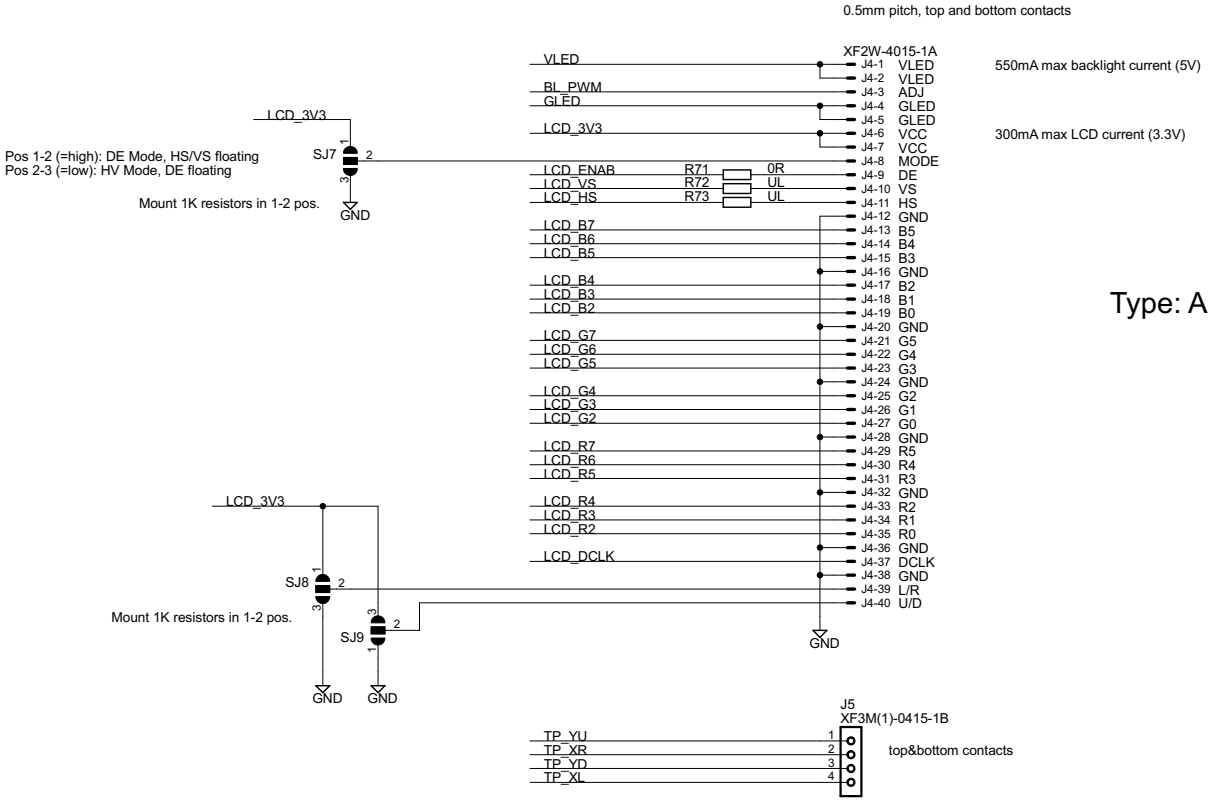

Can also be Molex 0522070485, Digikey: WM7675CT-ND
Bottom contacts: Molex 0522710479 (or -69), Digikey: WM7954CT-ND

Can also be TE Connectivity AMP Connectors 84953-4, Digikey: A33834CT-ND

(C) Embedded Artists AB

TITLE: COM Display Adapter rev A

Document Number:

Date: not saved!

Interface type B

4.3" LCD, 480x272px: NHD-4.3-480272EF-ATXL#(-T)(-CTP) from New Haven
4.3" LCD, 480x272px: RX043A-0207 (from Rogin) with RTP
4.3" LCD, 480x272px: UMSH-8864MD-8T (from URT) with CTP
5" LCD, 800x480px: NHD-5.0-800480TF-ATXL#(-T)(-CTP) from New Haven
5" LCD, 800x480px: RX050A-05 from Rogin with RTP
7" LCD, 800x480px: NHD-7.0-800480EF-ATXL#(-T)(-CTP) from New Haven

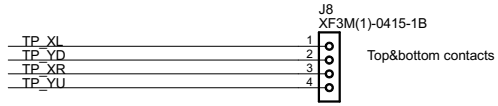

Can also be Molex 52207-0485, Digikey: WM7675CT-ND
Bottom contacts: Molex 0522710479 (or -69), Digikey: WM7954CT-ND

Can also be TE Connectivity AMP Connectors 84953-4, Digikey: A33834CT-ND

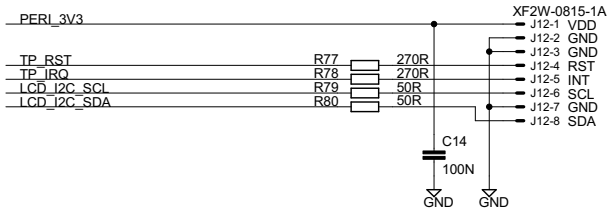

FPC connector, 0.5mm pitch, top & bottom contacts

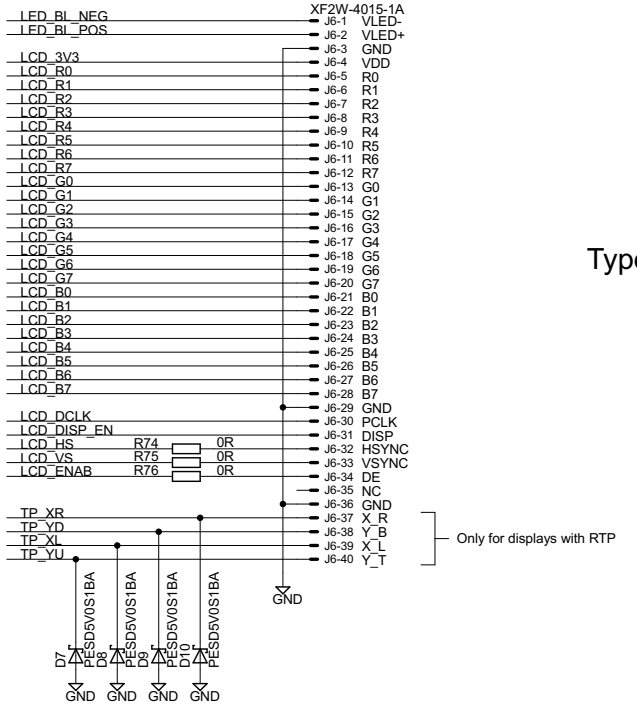

Type: B

3.0V / 150mA Supply

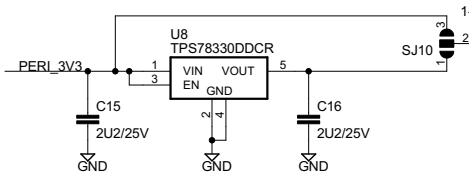

FPC connector, 1.0mm pitch, top contacts
Recommended Molex p/n: 52271-0679 (bottom)

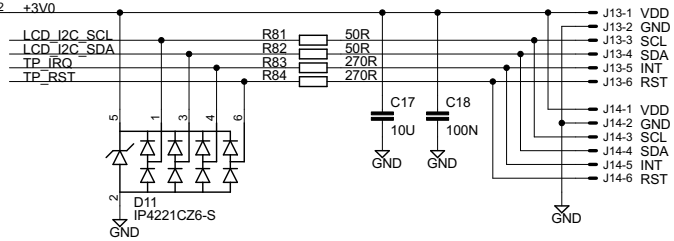

Embedded Artists

(C) Embedded Artists AB

TITLE: COM Display Adapter rev A

Document Number:

Date: not saved!

Sheet: 6/9

Interface type C

EDT Unified Interface Display Connector

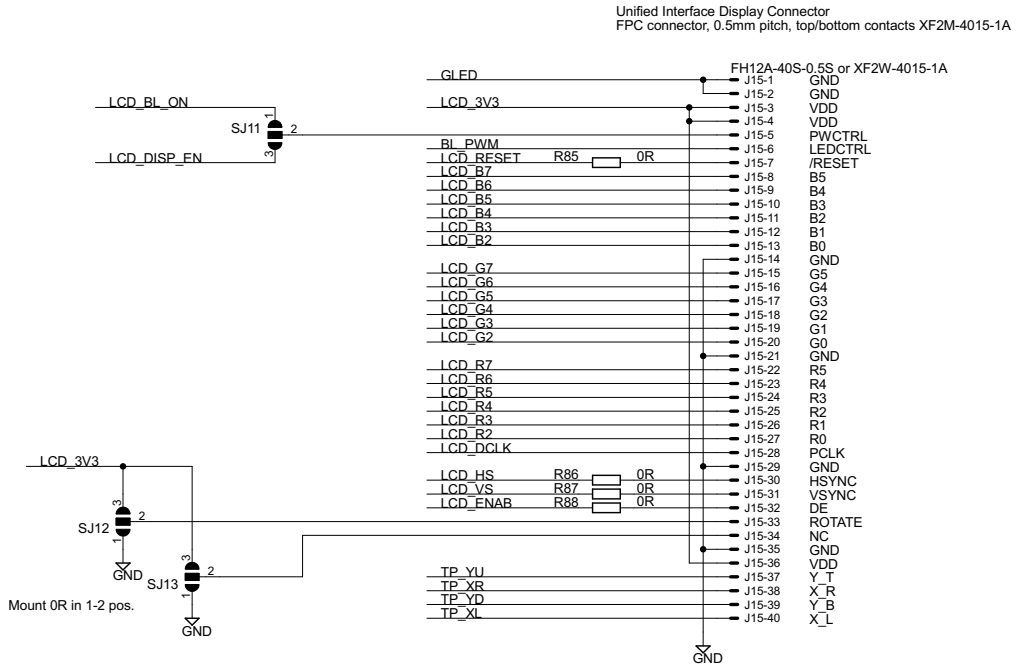

Type: C

Embedded Artists

(C) Embedded Artists AB

TITLE: COM Display Adapter rev A

Document Number:

Date: not saved!

Sheet: 7/9

Interface type D

7" LCD, 800x480px: UMSH-8596MD-30T from URT

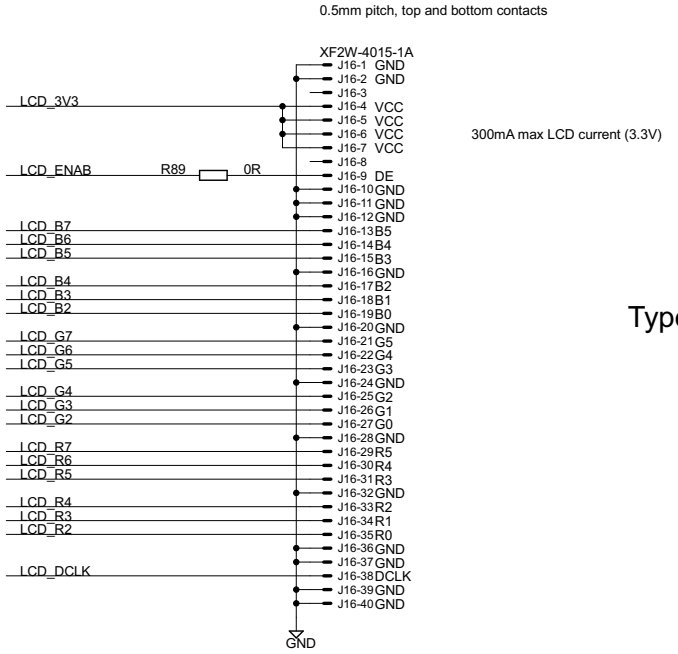

Type: D

CTP interface via J12

Embedded Artists

(C) Embedded Artists AB

TITLE: COM Display Adapter rev A

Document Number:

Date: not saved!

Sheet: 8/9

Adapter Boards

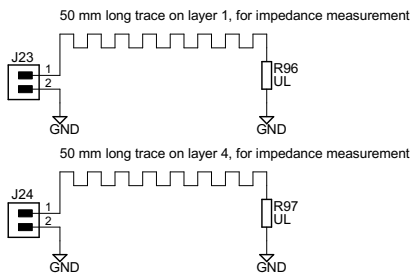

COM Carrier Board, rev A

COM Carrier Board, rev B

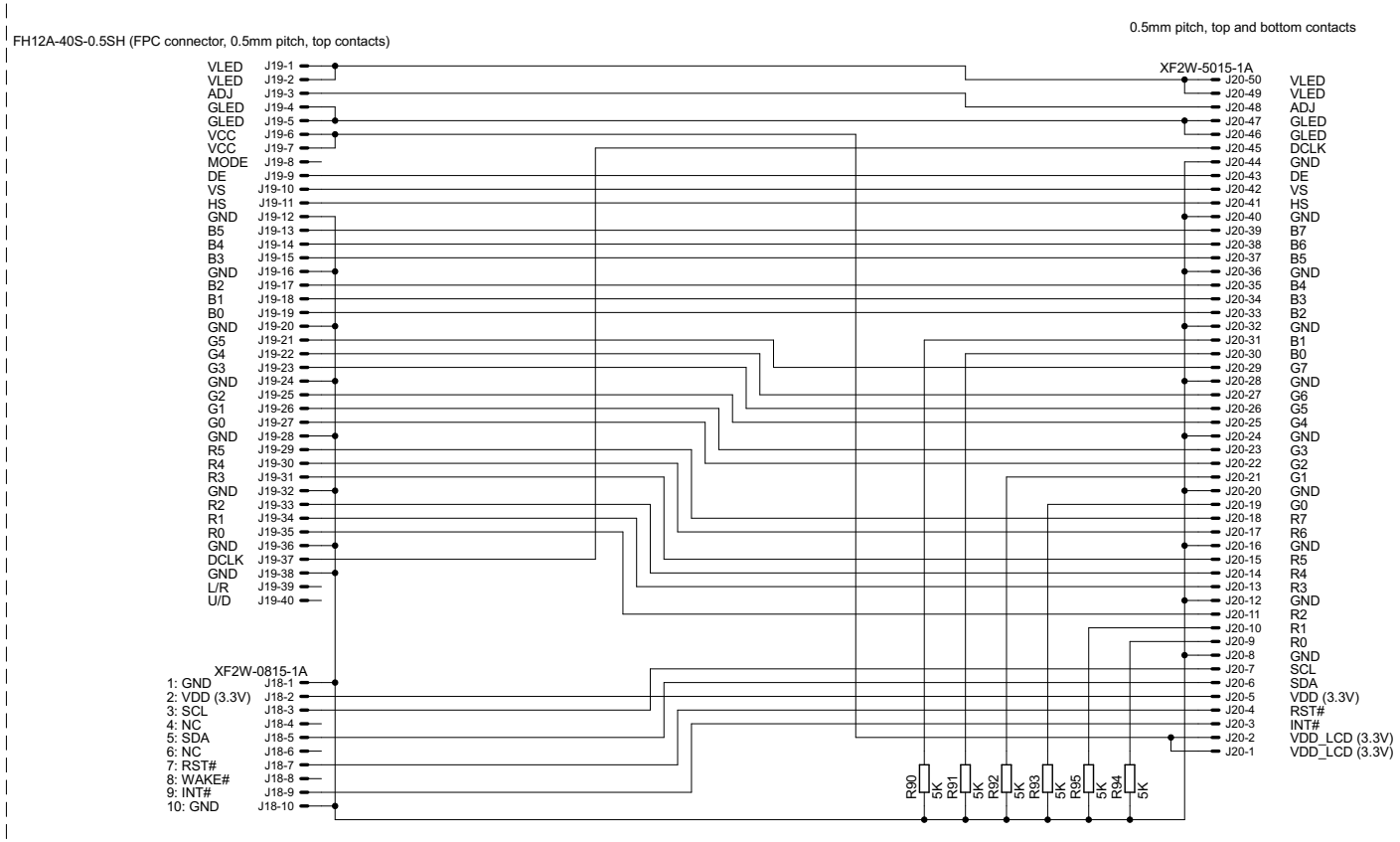

8-pos 0.5mm pitch FPC

6-pos 1mm pitch FPC

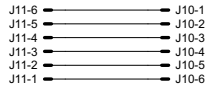

Embedded Artists

(C) Embedded Artists AB

TITLE: COM Display Adapter rev A

Document Number:

Date: not saved!

Sheet: 9/9